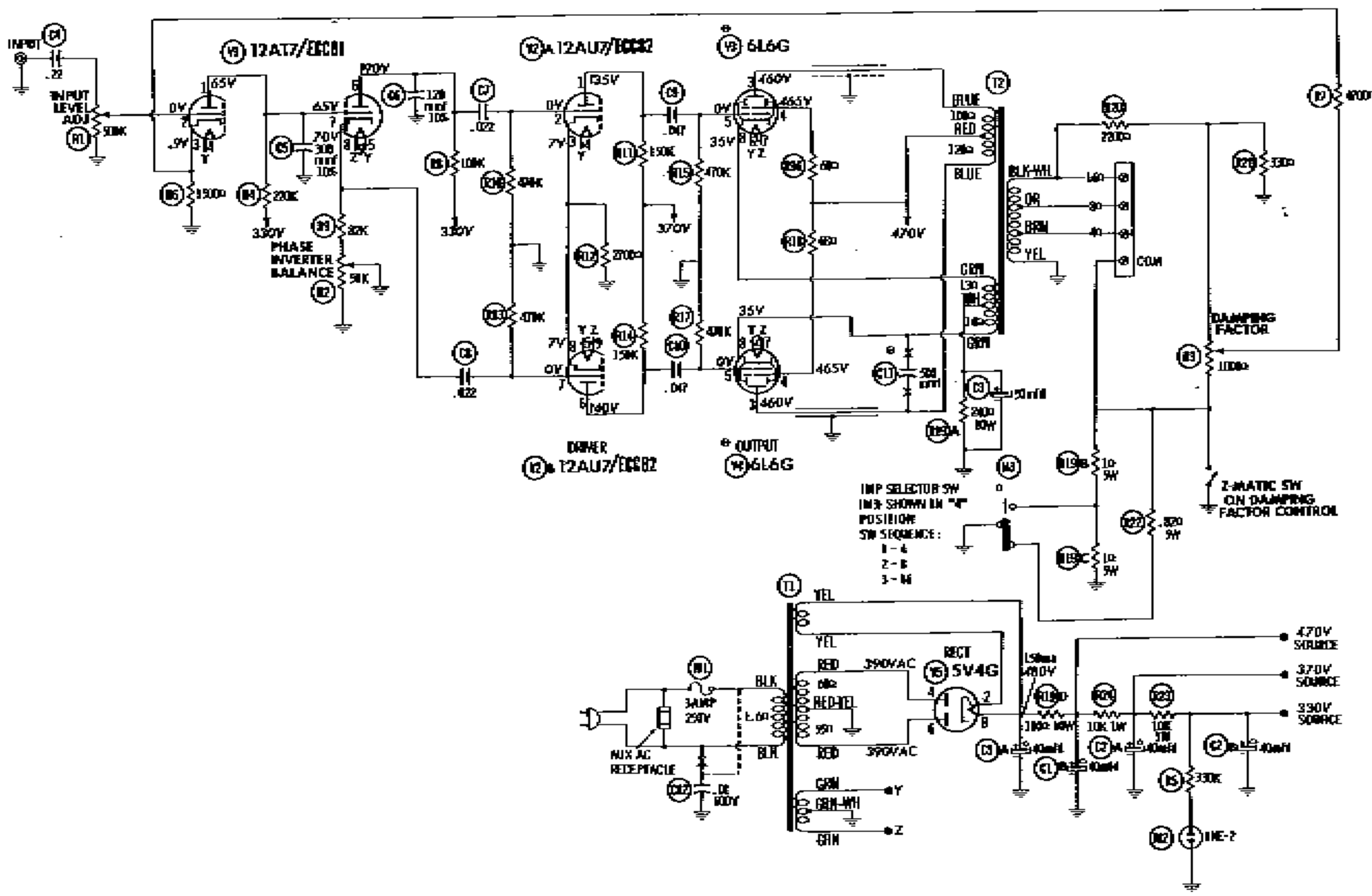
INPUT
INPUT LEVEL ADJ
PHASE INVERTER BALANCE
12AT7/ECC81
12AU7/ECC82
6L6G
DRIVER
OUTPUT
BLUE
RED
BLK-WH
OR
BRN
YEL
COM
DAMPING FACTOR
Z-MATIC SW ON DAMPING FACTOR CONTROL
INP SELECTOR SW IN S SHOWN IN "A" POSITION
SW SEQUENCE:
1 - A
2 - B
3 - M
RECT
5V4G
390VAC
470V SOURCE
370V SOURCE
330V SOURCE
AUX AC RECEPTACLE
3AMP 250V
NE-2