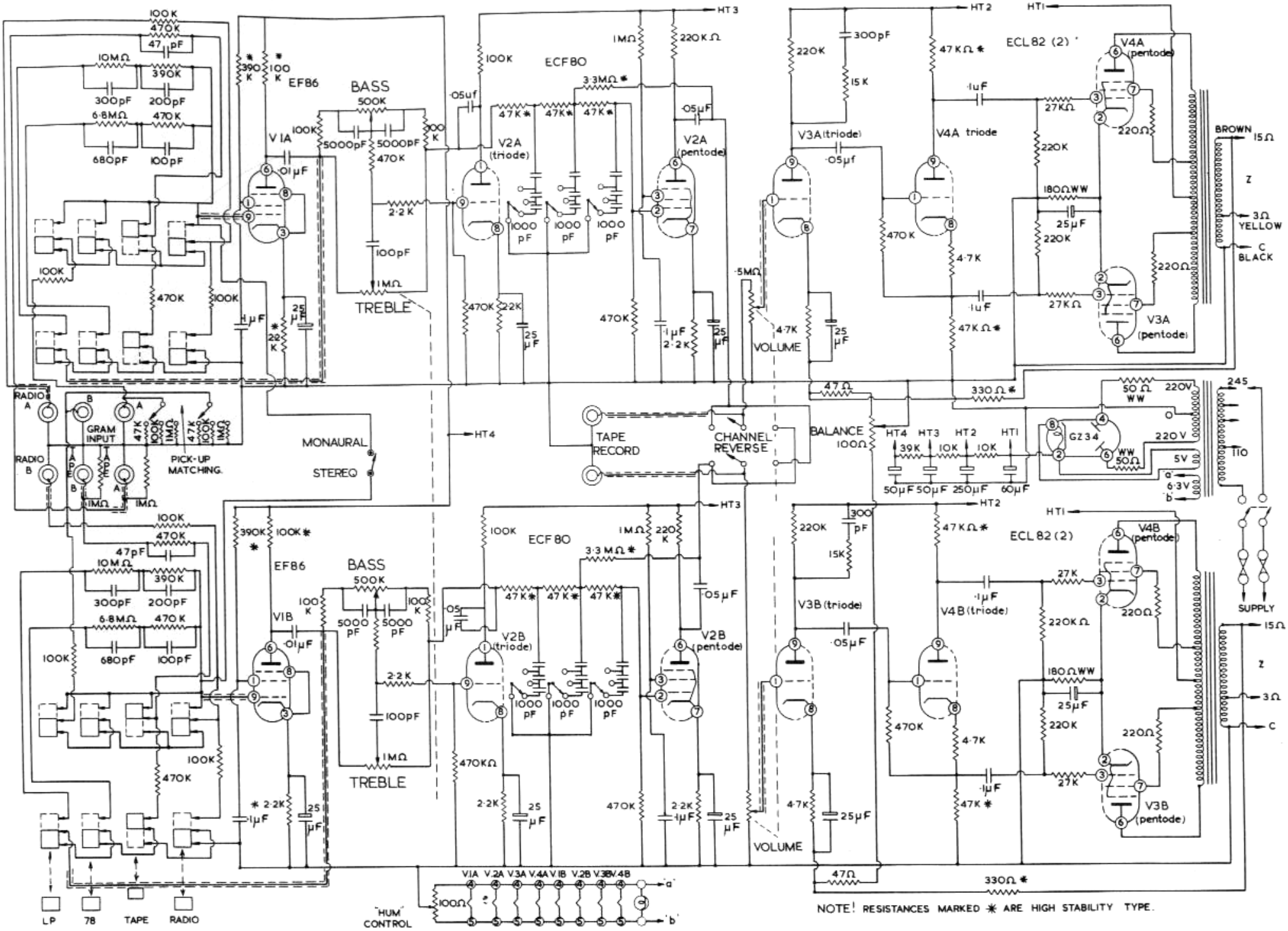

www.vintage-radio.info

Heathkit MODEL S.88 STEREOPHONIC SOUND AMPLIFIER CIRCUIT DAYSTROM LTD. GLOUCESTER, ENGLAND