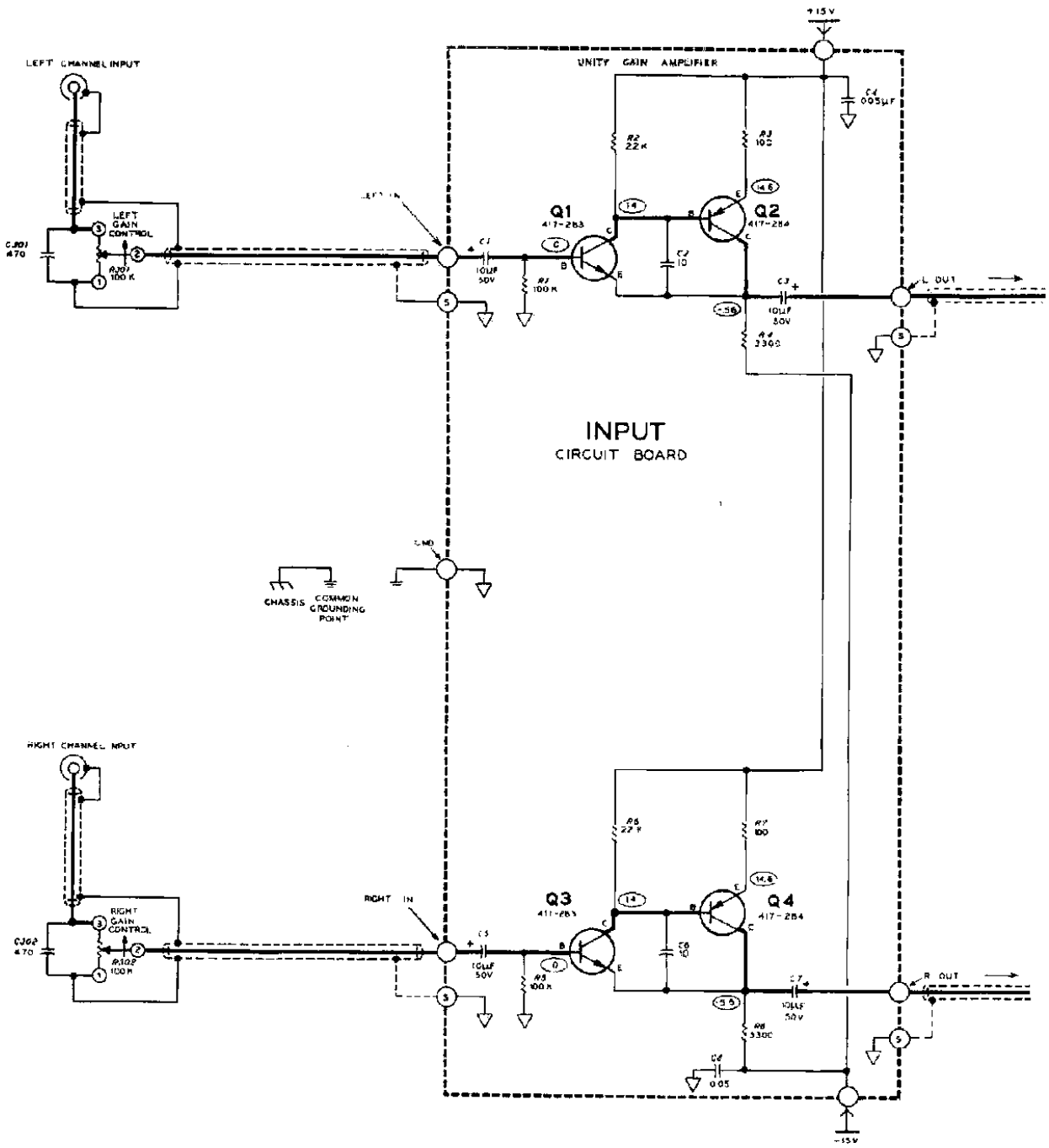
LEFT CHANNEL INPUT
UNITY GAIN AMPLIFIER
+15 V
C4 .005µF
R2 22K
R3 100
Q1 417-283
Q2 417-284
LEFT GAIN CONTROL
C301 470
R301 100 K
C1 10µF 50V
R1 100 K
C2 10
C3 10µF 50V
R4 330Ω
L OUT
INPUT
CIRCUIT BOARD
CHASSIS
COMMON GROUNDING POINT
RIGHT CHANNEL INPUT
RIGHT IN
Q3 417-283
Q4 417-284
RIGHT GAIN CONTROL
C302 470
R302 100 K
C5 10µF 50V
R5 100 K
C6 10
C7 10µF 50 V
R6 330Ω
R7 100
R8 22 K
C8 .05
R OUT
-15 V

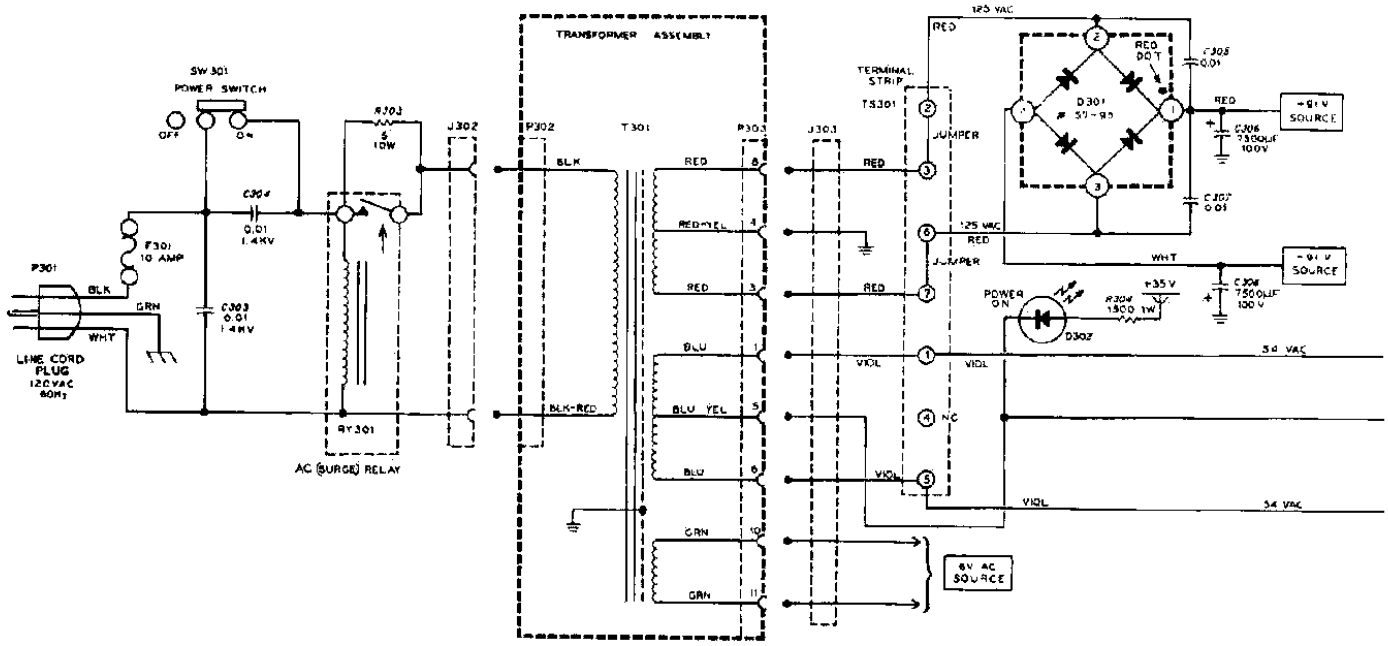
SW 301
POWER SWITCH
OFF
ON
R303 5 10W
J302
C304 0.01 1.4KV
F301 10 AMP
P301
BLK
GRN
WHT
C303 0.01 1.4KV
LINE CORD PLUG 120 VAC 60Hz
RY 301
AC (SURGE) RELAY
TRANSFORMER ASSEMBLY
P302
T301
P303
BLK
BLK-RED
RED
RED-YEL
BLU
BLU YEL
GRN
J303
TERMINAL STRIP
TS301
JUMPER
125 VAC
D301 # 57-95
C305 0.01
C306 7500µF 100V
C307 0.01
-91 V SOURCE
POWER ON
R304 1500 1W
+35 V
D302
C308 7500µF 100 V
VIOL
NC
54 VAC
6V AC SOURCE

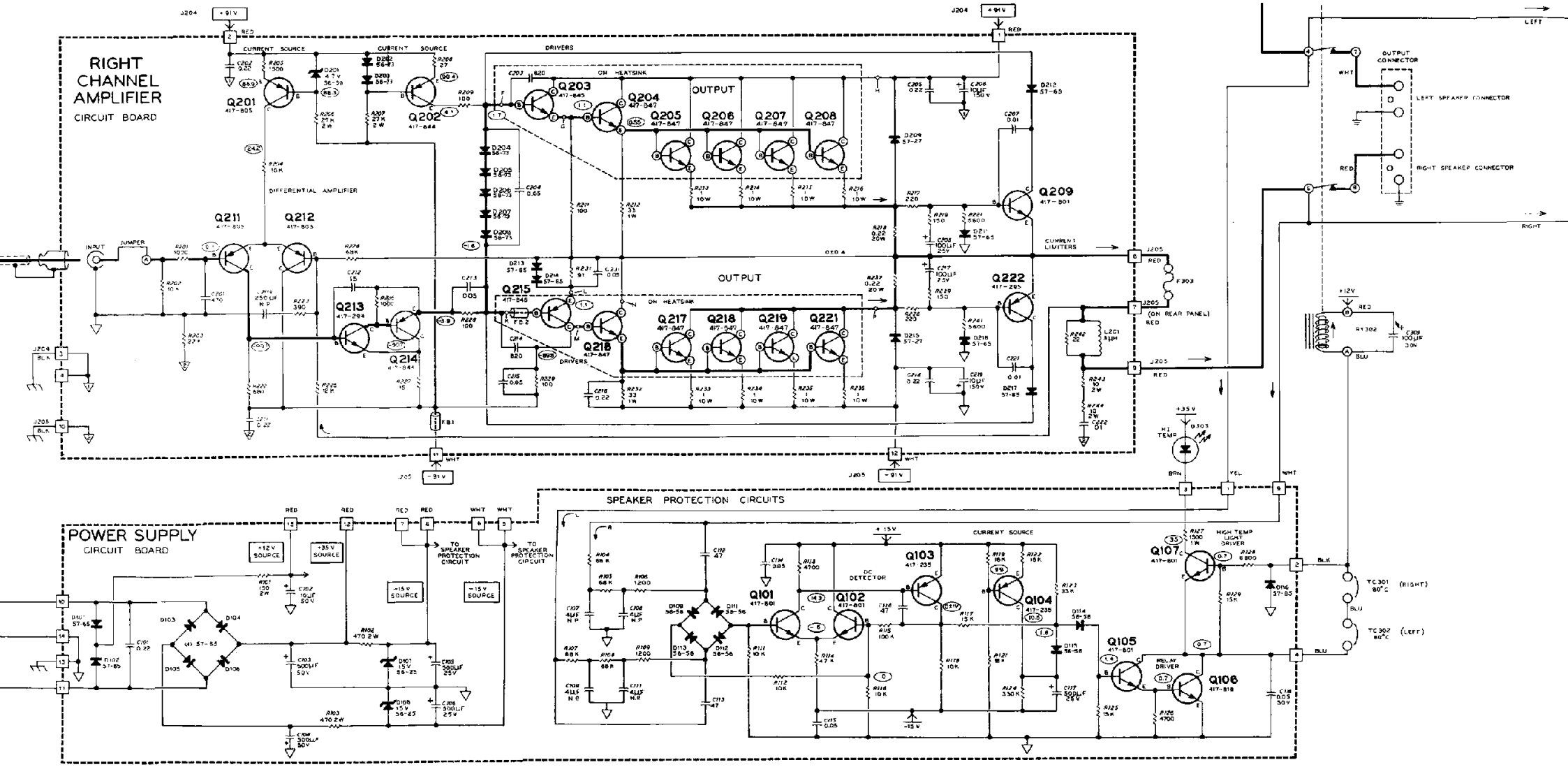
RIGHT CHANNEL AMPLIFIER
CIRCUIT BOARD
POWER SUPPLY
CIRCUIT BOARD
SPEAKER PROTECTION CIRCUITS
DIFFERENTIAL AMPLIFIER
CURRENT SOURCE
DRIVERS
OUTPUT
ON HEATSINK
CURRENT LIMITERS
OUTPUT CONNECTOR
LEFT SPEAKER CONNECTOR
RIGHT SPEAKER CONNECTOR
(ON REAR PANEL)
DC DETECTOR
RELAY DRIVER
HIGH TEMP LIGHT DRIVER
HI TEMP
TO SPEAKER PROTECTION CIRCUIT
+12V SOURCE
+35V SOURCE
-15V SOURCE
TC301 80°C (RIGHT)
TC302 80°C (LEFT)
LEFT
RIGHT
INPUT
JUMPER
+91V
-91V
+35V
+12V
+15V
-15V
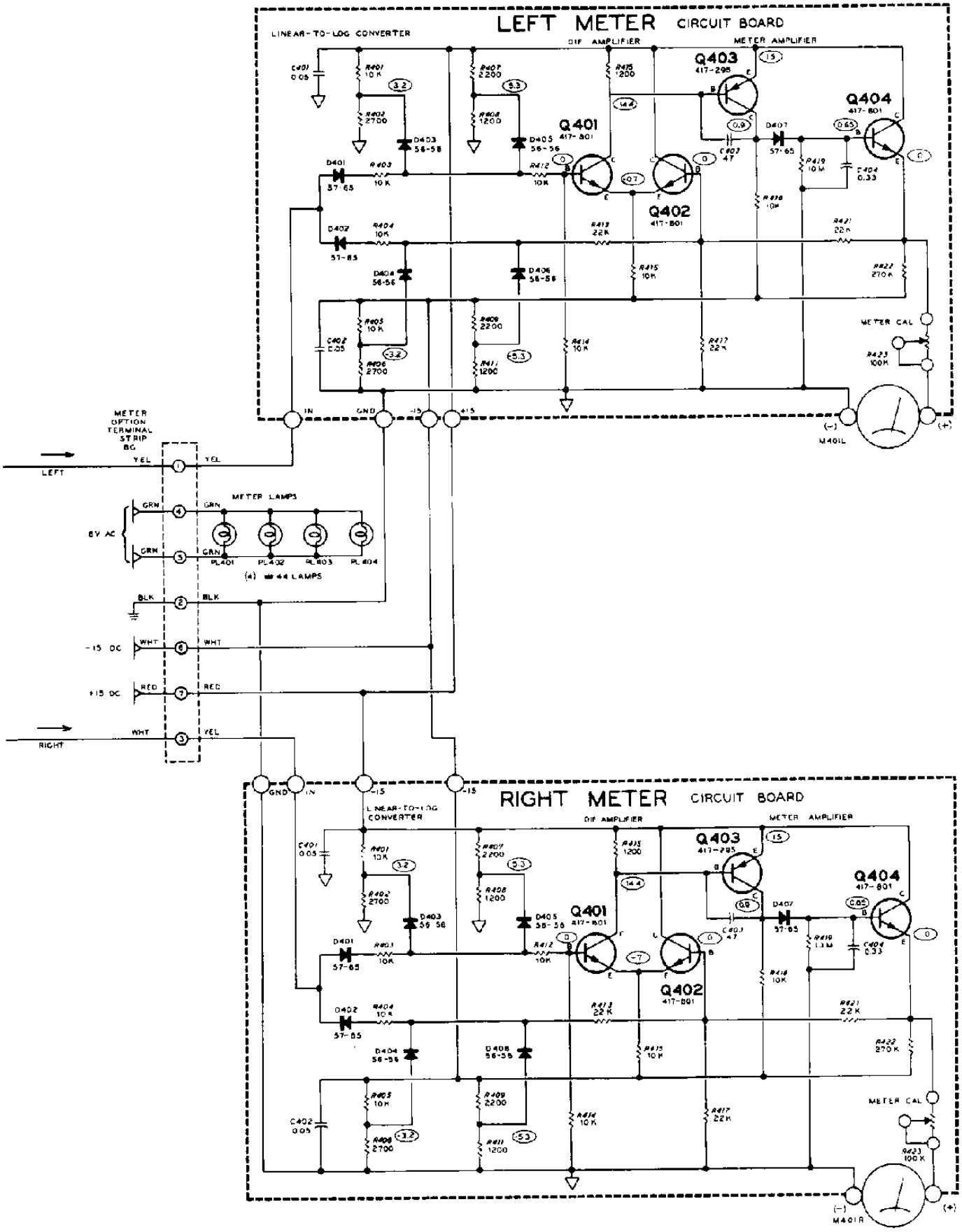
METER ACCESSORY
MODEL AAA-1640-1
(OPTIONAL)